REV.	DESCRIPTION	DATE	DRAFTER	APPROVER
A1	DWG.REL	2020.6.08	ZHANG	JIN

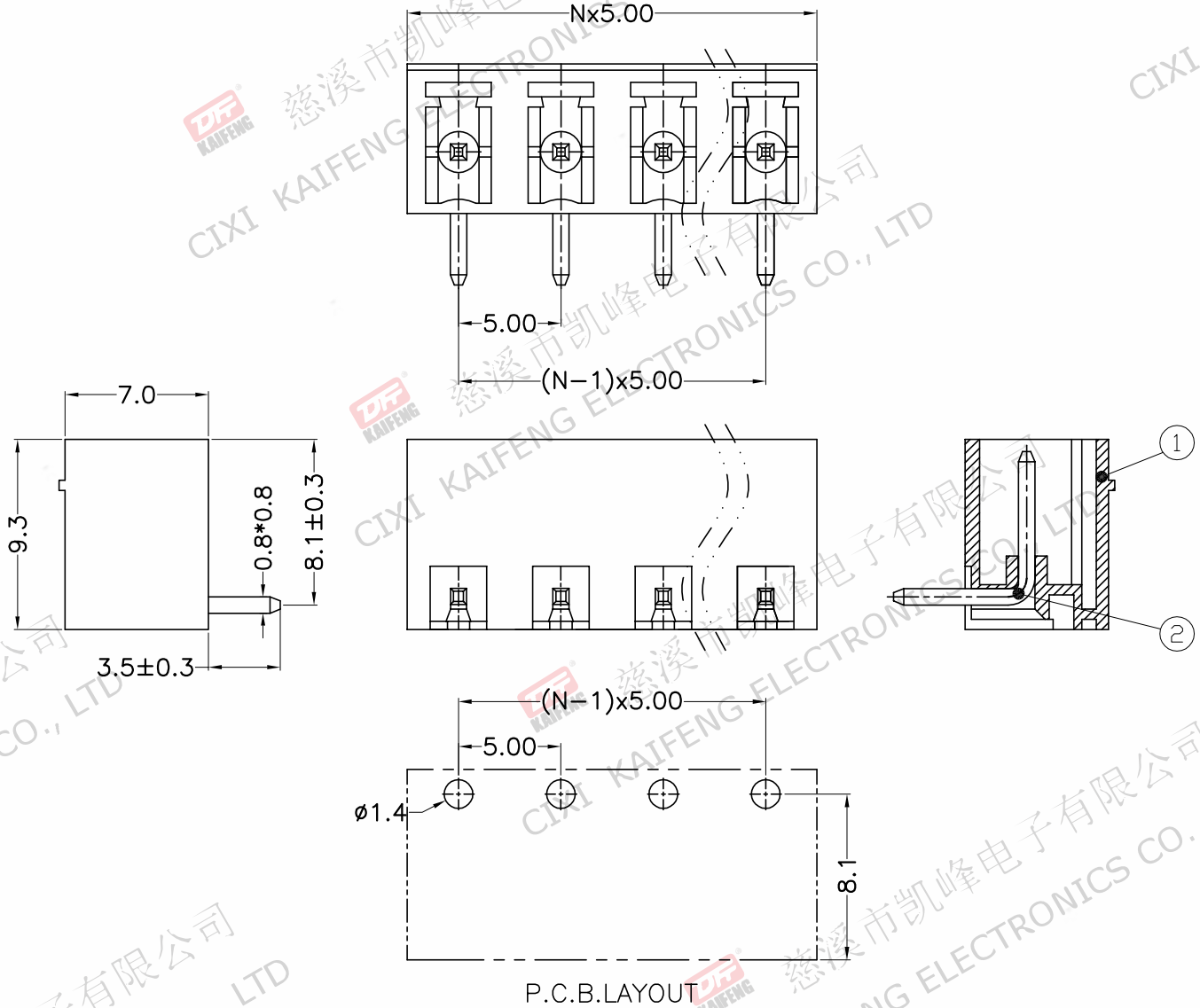

P.C.B.LAYOUT

- Material
  ①Housing : PA66, UL94V−0
  ②Pin header : Copper alloy, Tin plated
- Electrical

	UL	IEC
Rated voltage :	300V	320V
Rated current :	8A	7A

  Contact resistance : 20mΩ(Max)
  Insulation resistance: 500MΩ/DC500V
  Withstanding Voltage : AC2000V/1min
- Mechanical
  Operating temperature:−40℃~+105℃
  Soldering temperature:250℃±5/5sec
- RoHS compliance

HOW TO ORDER

KF2EDGR−Y−5.0−XXP−1 X−XXXXX

- KF2EDGR−Y: MODEL
- 5.0: Pitch:mm
- XXP: No.of poles: 2~24P
- 1: 1:Single Pitch, 2:Double Pitch
- X: Color: G:Green R:Red K:Black W:White O:Orange B:Blue GR:Gray
- XXXXX: Customer Request

Pitch range			Nominal dimension range						
>0 ~ 6	>6 ~ 10	>10 ~ 24	>0 ~ 30	>30 ~ 60	>60 ~ 100	>100 ~ 150	>150		0.1/10
±0.15	±0.20	±0.30	±0.30	±0.50	±0.70	±1.00	±1.30		±2°

PROJECTION		TITLE	KF2EDGR−Y−5.0−XXP−1X
UNIT	mm		
SHEET SIZE	A4	SERIES	KF2EDGR−Y
DRAWING TYPE	CUSTOMER DRAWING		
SCALE	1:1	SHEET	1 OF 1
DRAWING NO.	W10000902		

慈溪市凯峰电子有限公司
CIXI KAIFENG ELECTRONICS CO.,LTD