REV.	DESCRIPTION	DATE	DRAFTER	APPROVER
A1	DWG.REL	2020.05.20	LiuZH	JIN

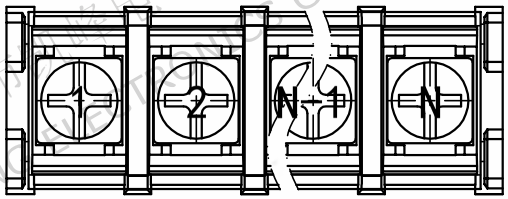

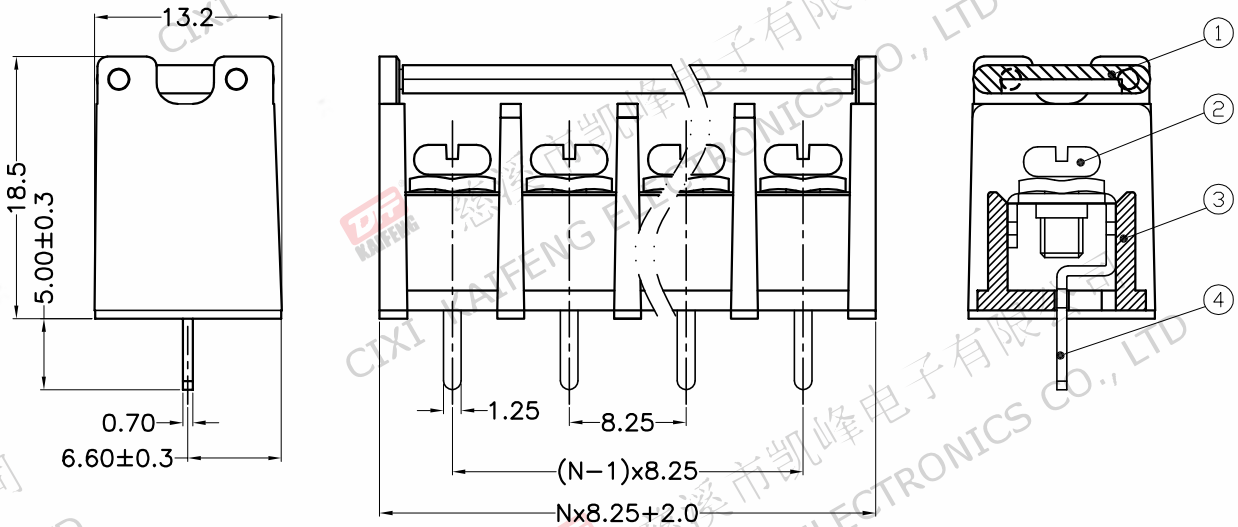

- Material
  ①Cover : PC
  ②Screws : M3.0 steel, Ni plated
  ③Housing : PA66,UL94V−0
  ④Terminal : Brass, Tin plated

- Electrical

	UL	IEC
Rated voltage :	300V	450V
Rated current :	20A	24A

  Contact resistance : 20mΩ(Max)
  Insulation resistance: 500MΩ/DC500V
  Withstanding Voltage : AC2000V/1min
  Wire range: 22−12AWG 2.5mm²

- Mechanical
  Operating temperature:−40℃∽+105℃
  Soldering temperature:250℃±5/5sec
  Torque: 0.5N.m (4.43Lb.in)

- RoHS compliance

HOW TO ORDER

KF−30CM−8.25−XXP−1 X−XXXXX

- KF−30CM → MODEL
- 8.25 → Pitch:mm
- XXP → No.of poles: 2~24P
- 1 → 1:Single Pitch, 2:Double Pitch
- X → Color: G:Green, K:Black, O:Orange, GR:Gray, R:Red, W:White, B:Blue
- XXXXX → Customer Request

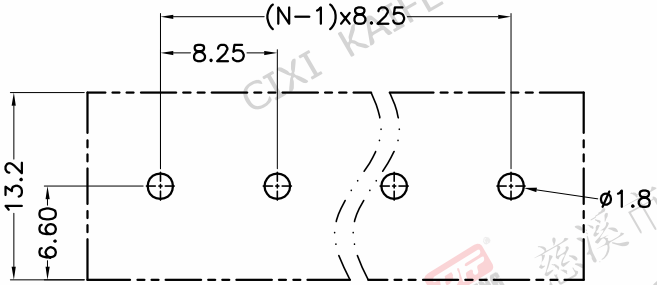

P.C.B.LAYOUT

Pitch range			Nominal dimension range						
>0 ~ 6	>6 ~ 10	>10 ~ 24	>0 ~ 30	>30 ~ 60	>60 ~ 100	>100 ~ 150	>150		0.1/10
±0.15	±0.20	±0.30	±0.30	±0.50	±0.70	±1.00	±1.30		±2°

DRAWING TYPE	CUSTOMER DRAWING		
SCALE	1:1	SHEET	1 OF 1
DRAWING NO.	W12000582		

PROJECTION		TITLE	KF−30CM−8.25−XXP−1X
UNIT	mm		
SHEET SIZE	A4	SERIES	KF−30CM

慈溪市凯峰电子有限公司
CIXI KAIFENG ELECTRONICS CO.,LTD